Glass patch fitting polished chrome with floor and ceiling mounting plates

BO 5200052

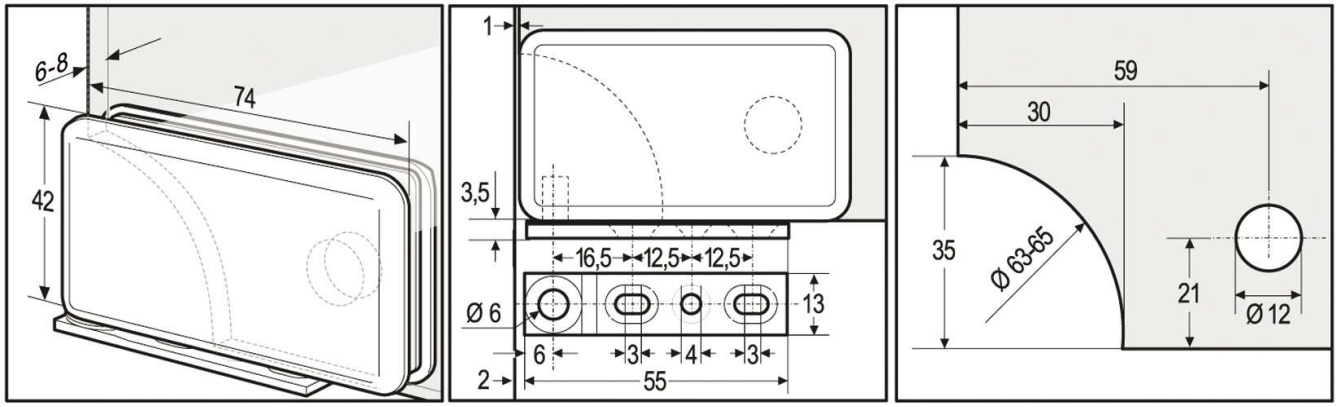

Bohle America, Inc. – Headquarters · 10924 Granite Street · Suite 200 · Charlotte, NC 28273 · T +1 704 247 8400 · info@bohle-america.com